ARTE LAMP

ASSEMBLY INSTRUCTION

A
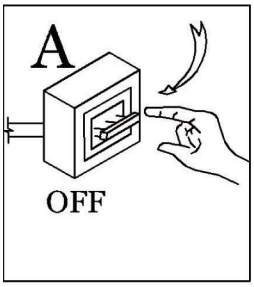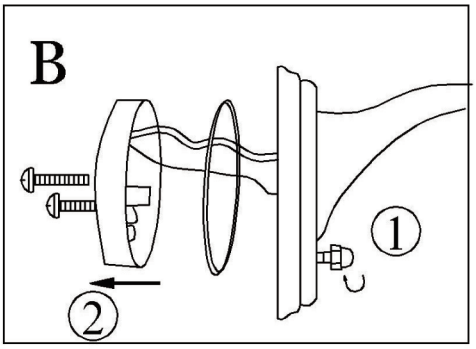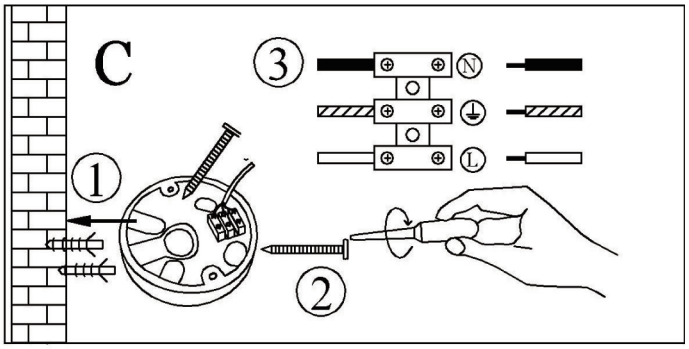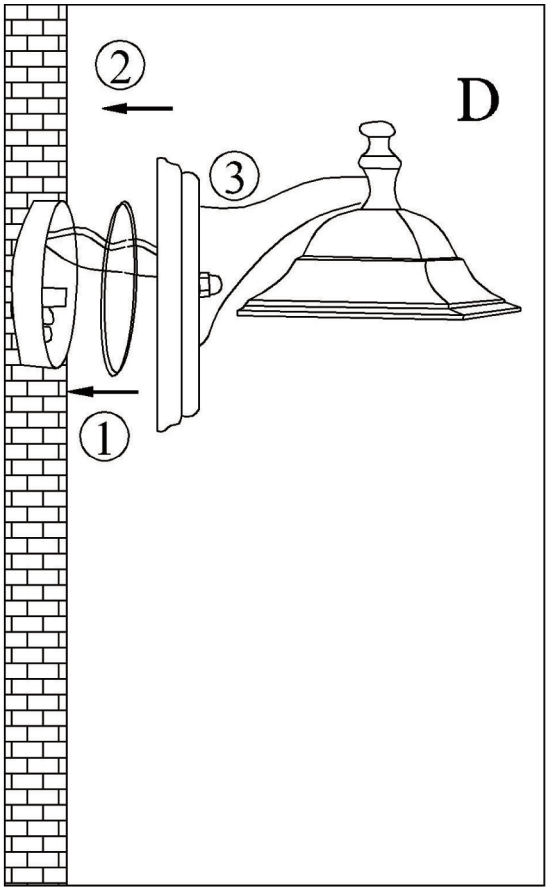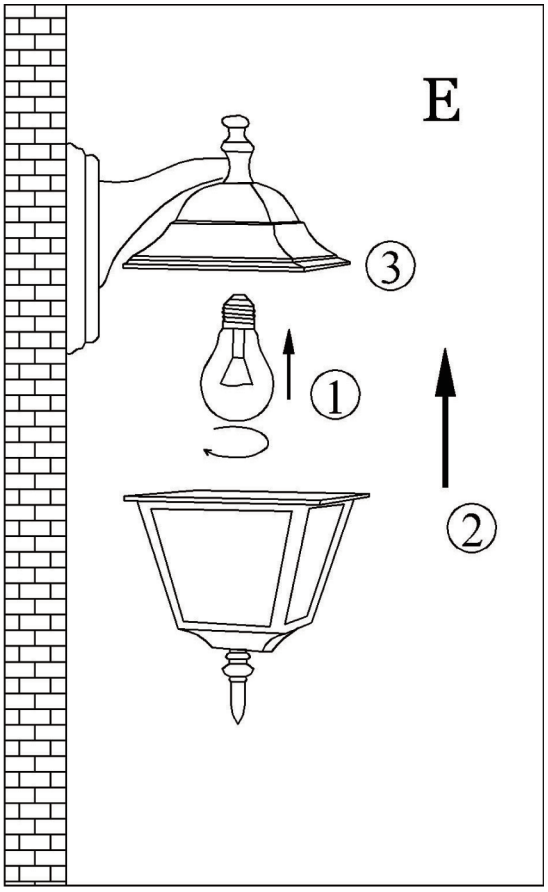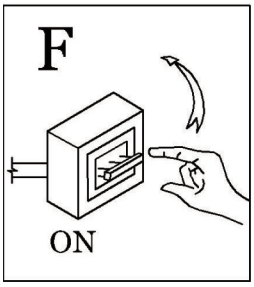
ИНСТРУКЦИЯ A1012AL-1BK