ARTE LAMP

ASSEMBLY INSTRUCTION
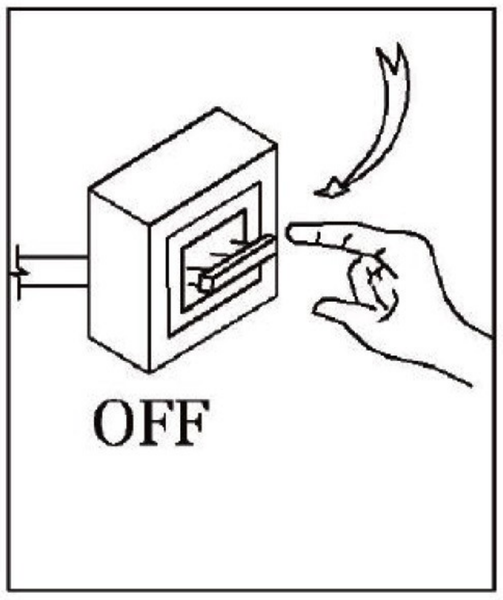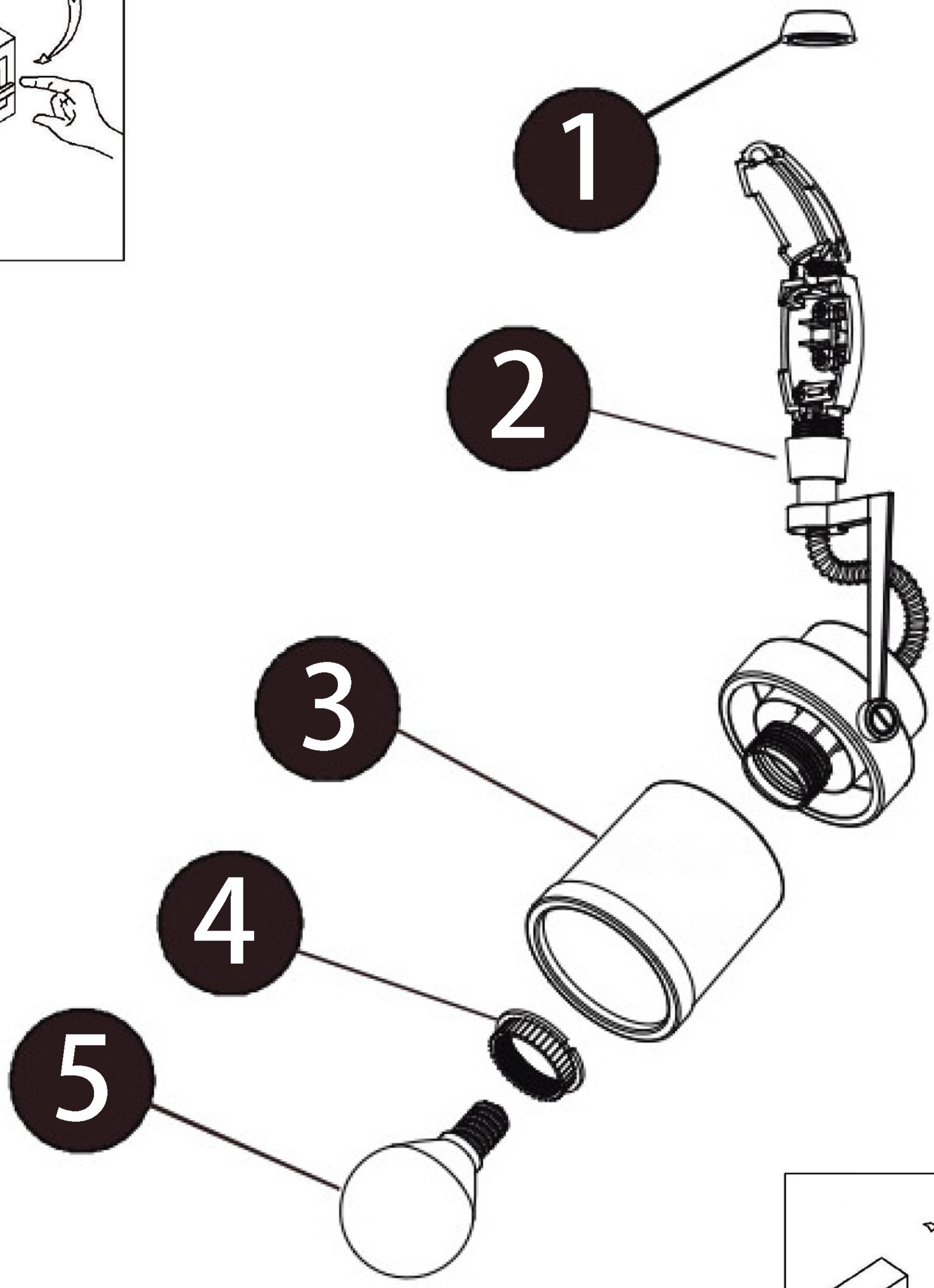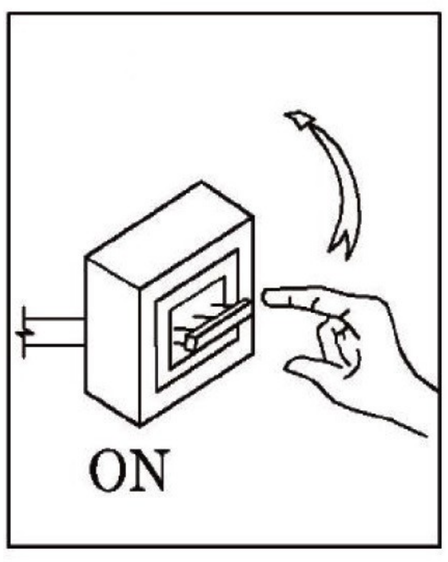
ИНСТРУКЦИЯ A3056PL-1SI