ARTE LAMP

ASSEMBLY INSTRUCTION

ИНСТРУКЦИЯ

A3304AL-1BK
A3304AL-1WH
A3304AL-1GY
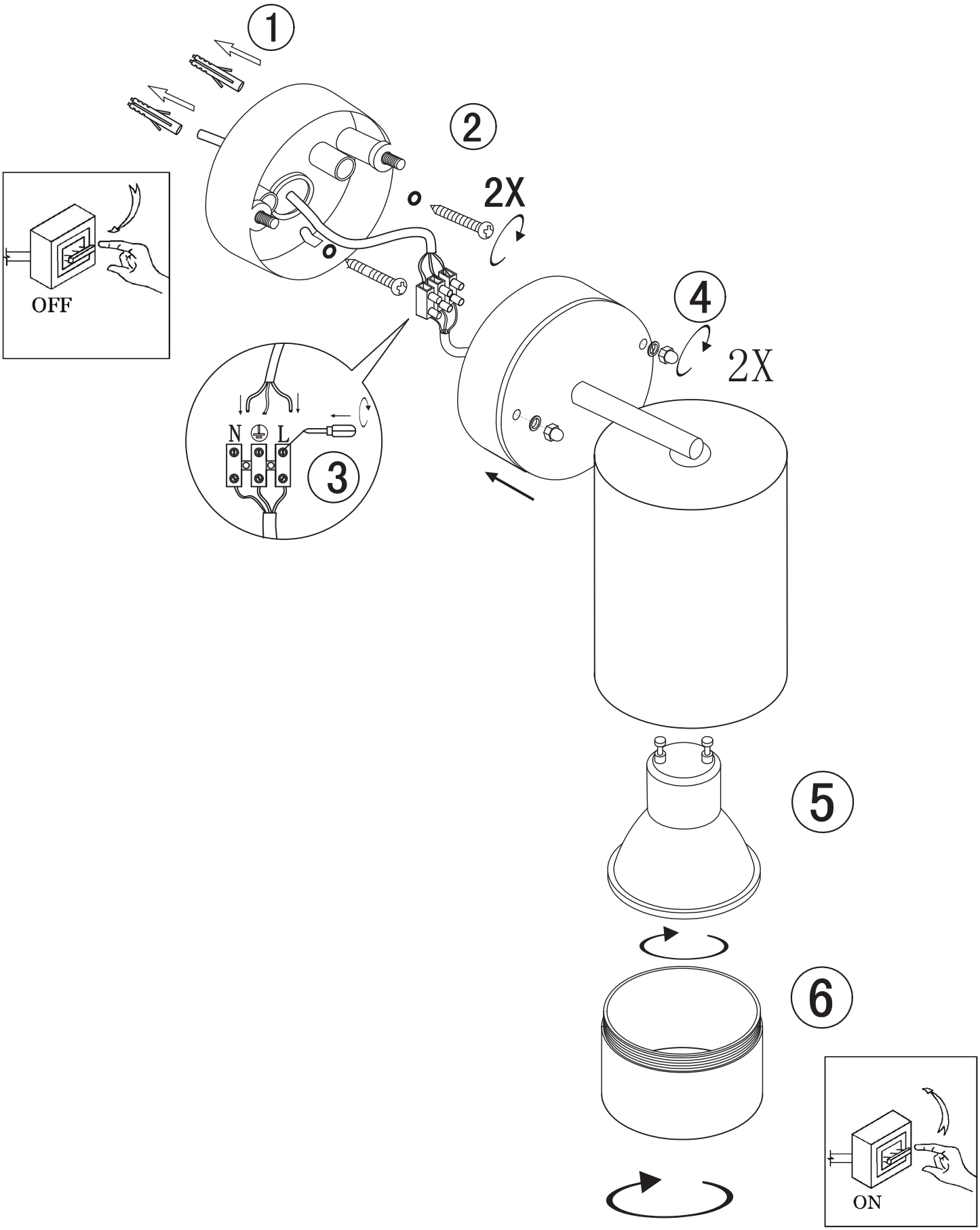
A