ARTE LAMP

ASSEMBLY INSTRUCTION

A3479PL-9CC

ИНСТРУКЦИЯ

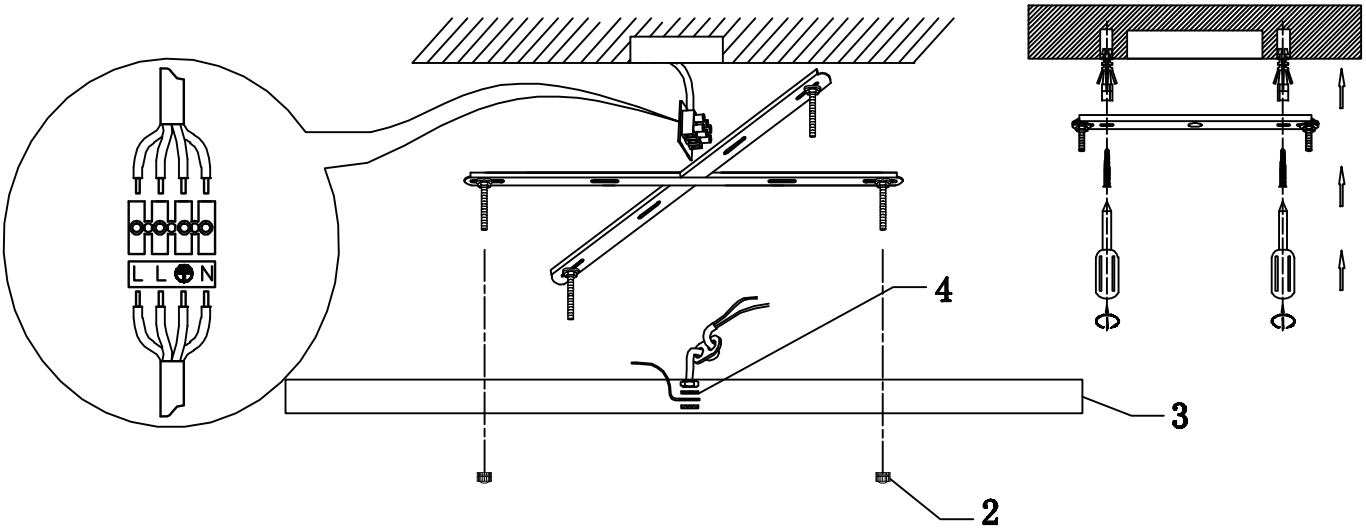

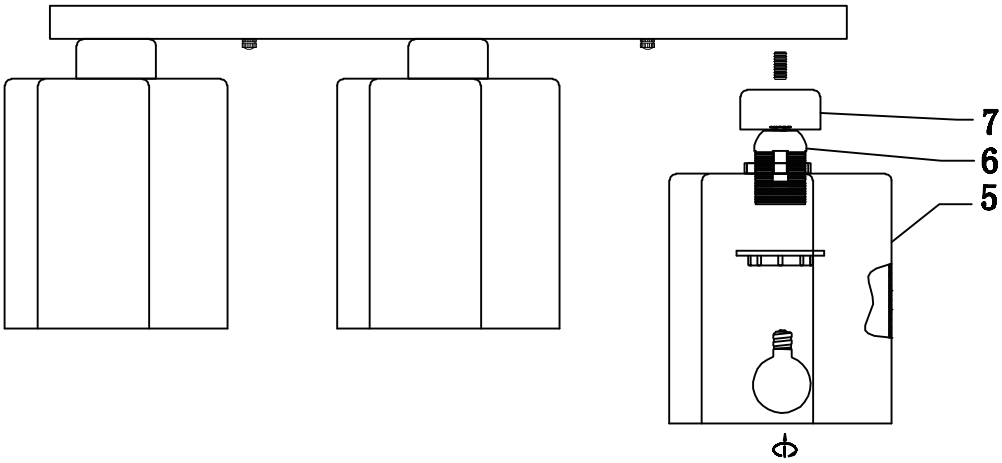

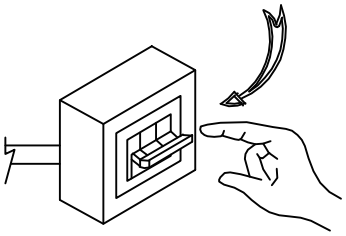

OFF 1

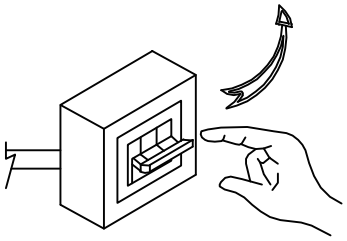

ON 8