ARTE LAMP

ASSEMBLY INSTRUCTION

ИНСТРУКЦИЯ

A4510AP-1SS

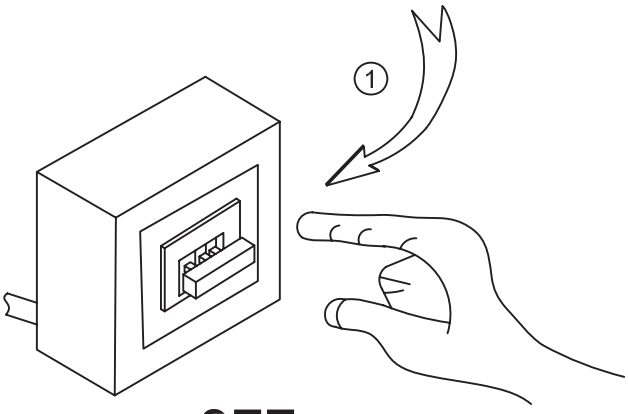

OFF

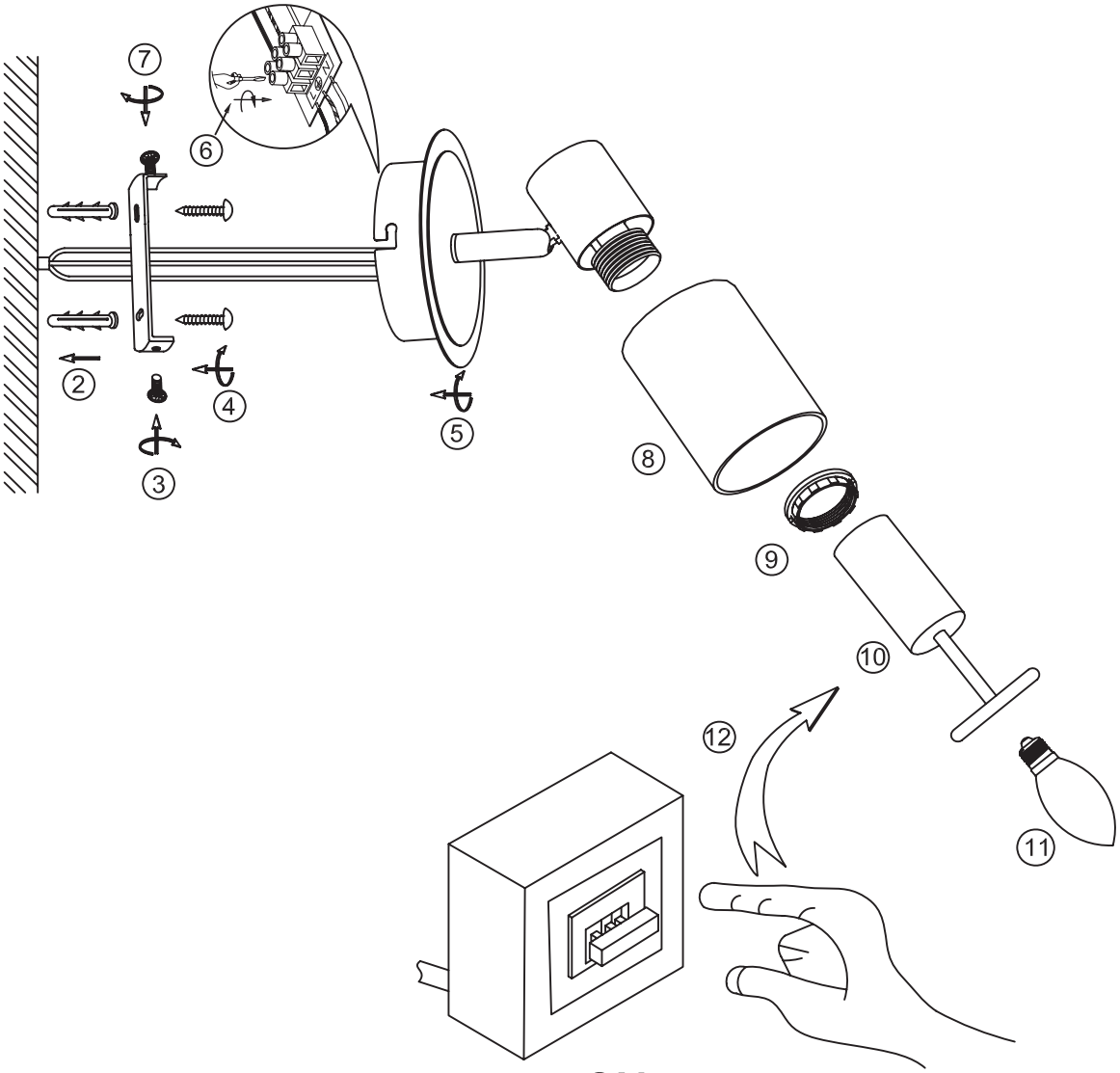

ON