ARTE LAMP

ASSEMBLY INSTRUCTION

ИНСТРУКЦИЯ

A6014IN-1SS A6015IN-1SS
A6017IN-1SS

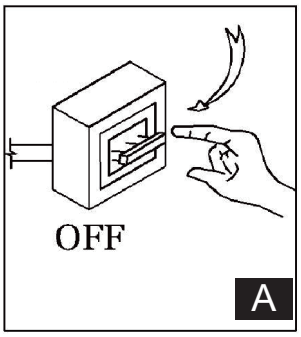

B

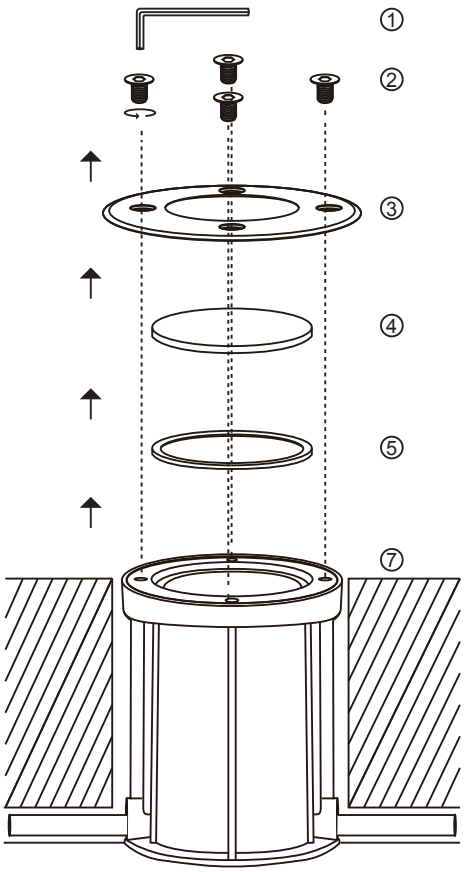

C

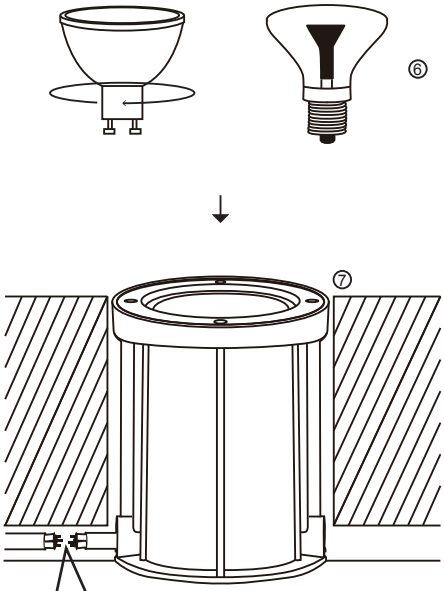
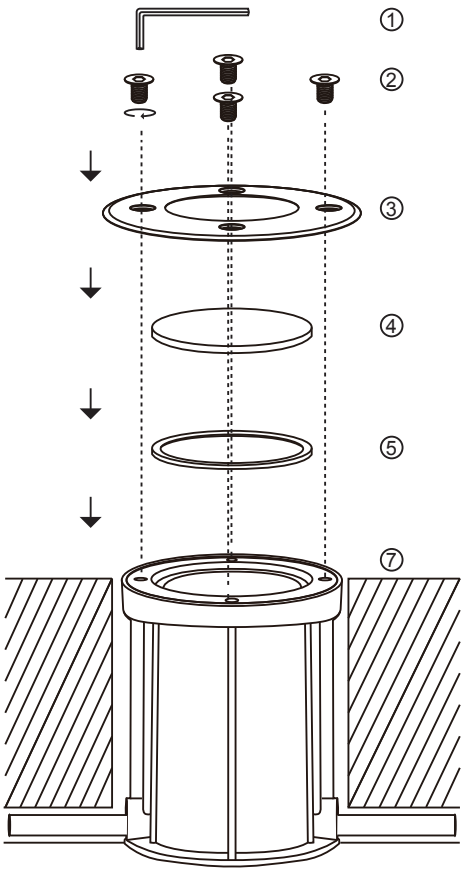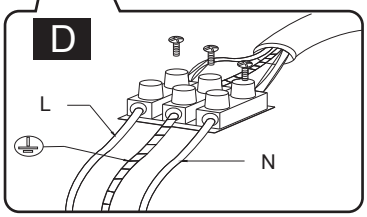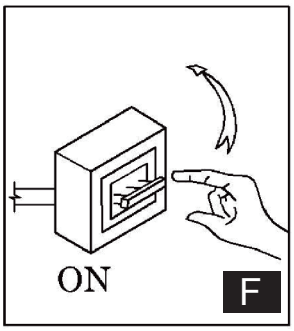
E