ARTE LAMP

ASSEMBLY INSTRUCTION
ИНСТРУКЦИЯ

A

A6110SP-2WH
A6110SP-2BK

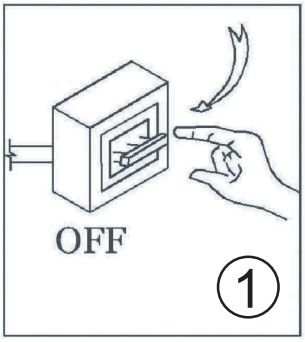

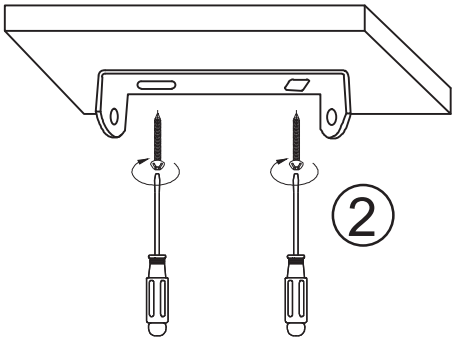

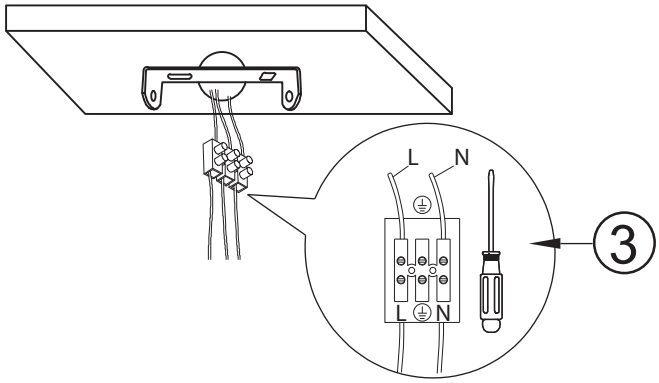

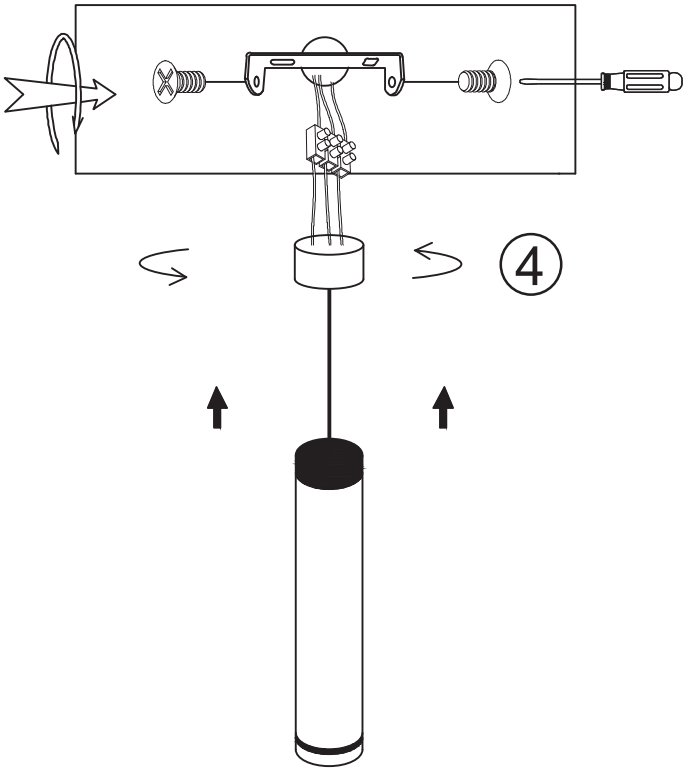

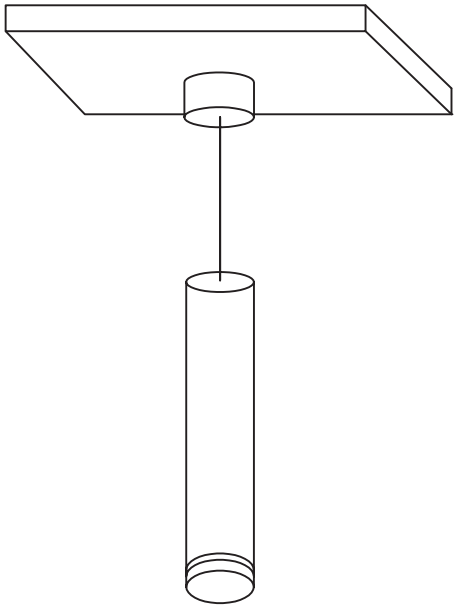

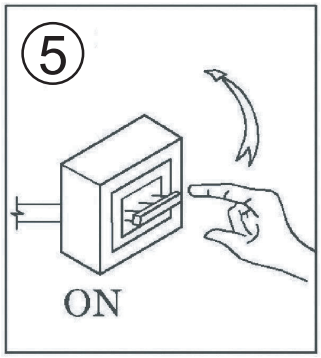

CE INDOOR IP20 82 20 PAP