ARTE LAMP

ASSEMBLY INSTRUCTION

A7141PL-3WH

ИНСТРУКЦИЯ

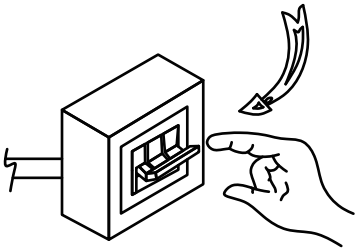

OFF 1

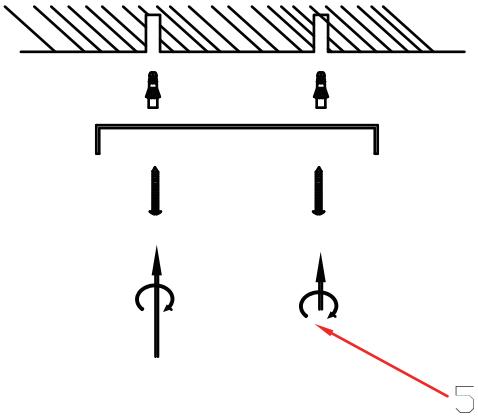

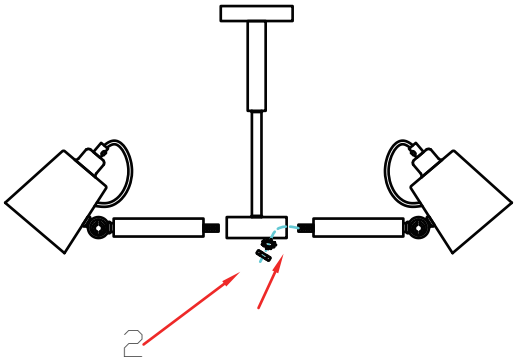

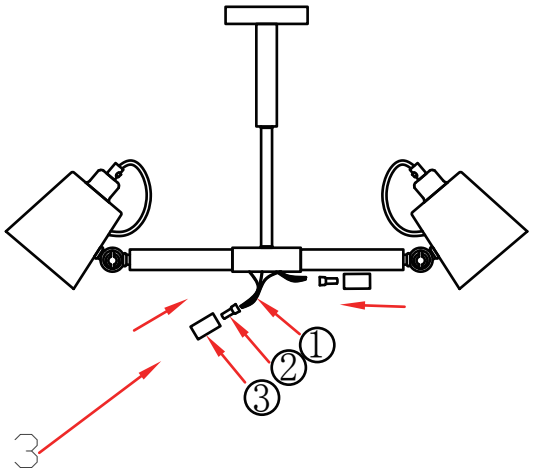

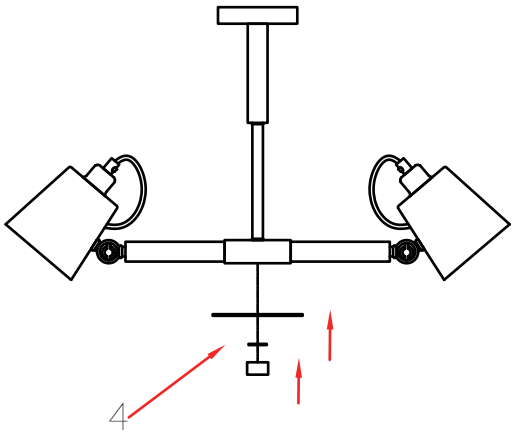

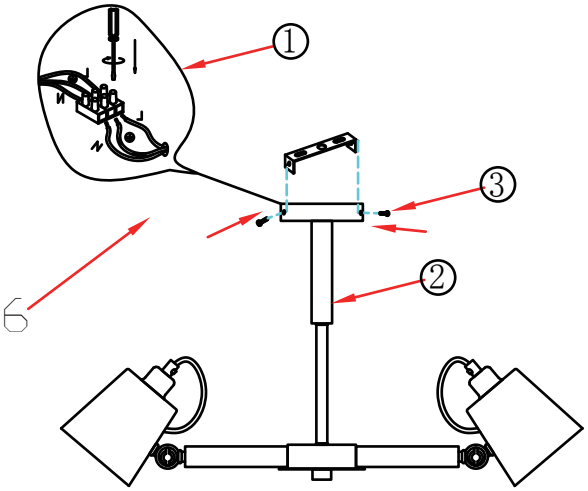

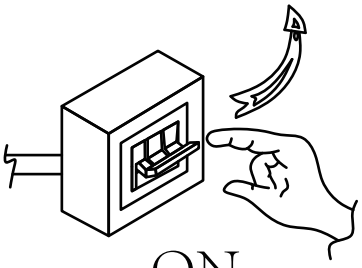

ON 7