ARTE LAMP

ASSEMBLY INSTRUCTION

ИНСТРУКЦИЯ A7984SP-3CC

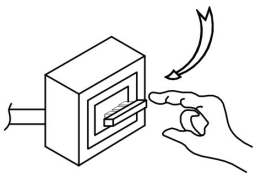

OFF 1

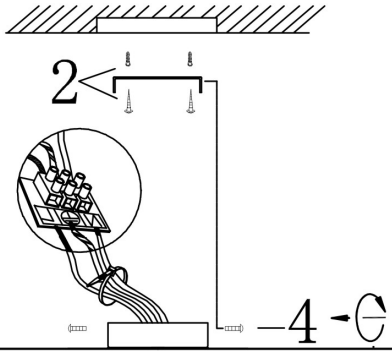

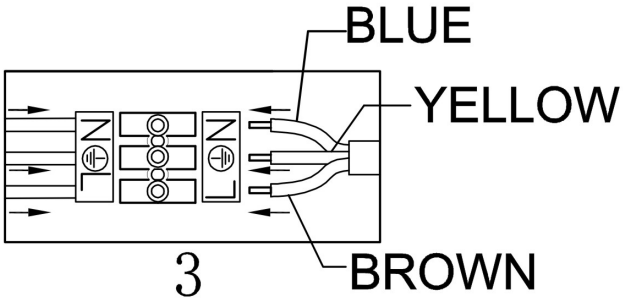

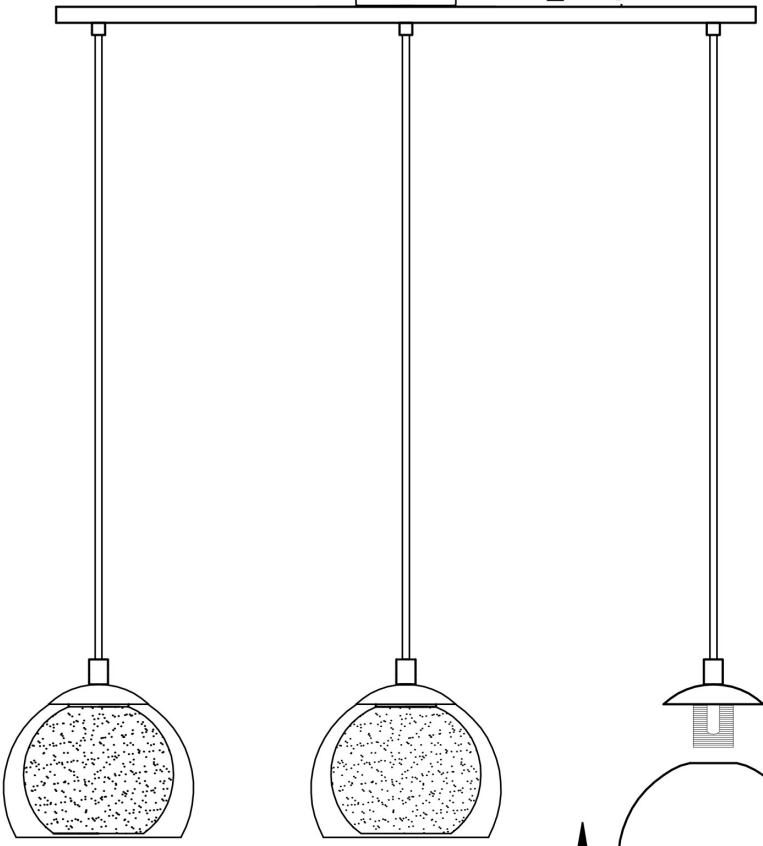

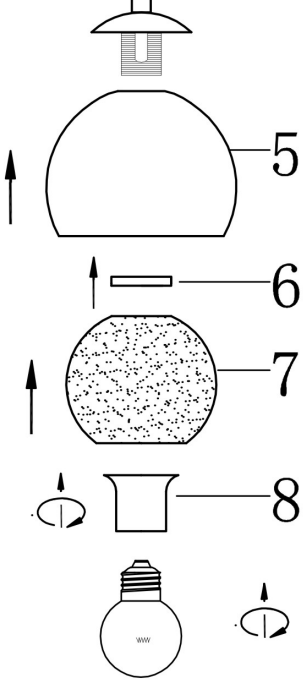

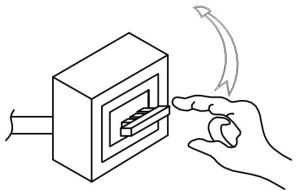

ON 9