Paulmann

Safety Instructions

0, 1, 3, 4, 6, 9, 10, 15, 16, 17, 18, 21.

Info Hotline

+49 (0) 5041 998 389
Mon. - Do. 7⁰⁰ - 20⁰⁰
Fr. 7⁰⁰ - 17⁰⁰

Paulmann Licht GmbH
Quezinger Feld 2
31832 Springe
Germany

www.paulmann.com
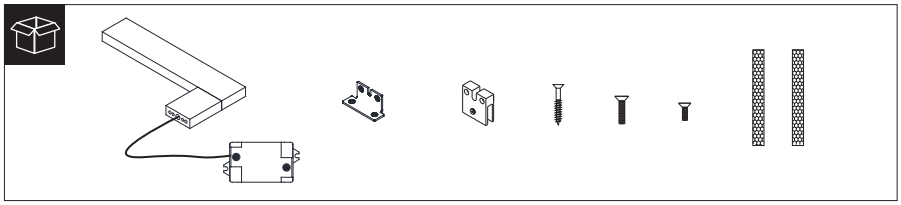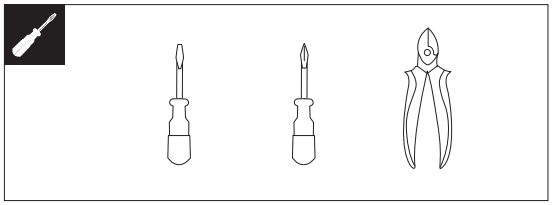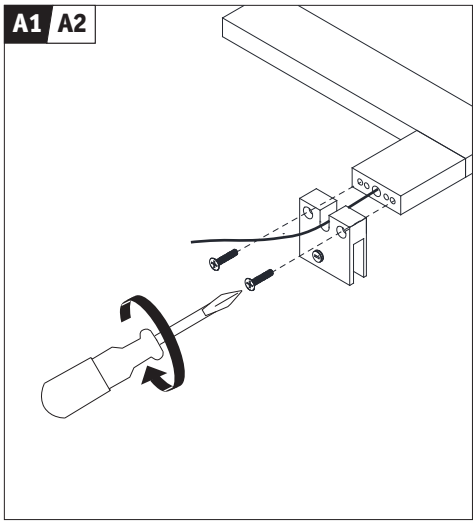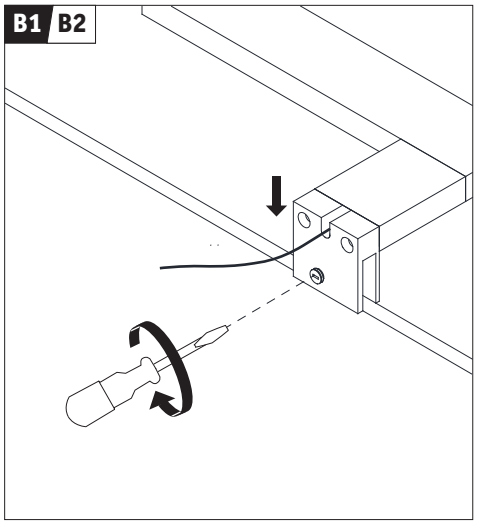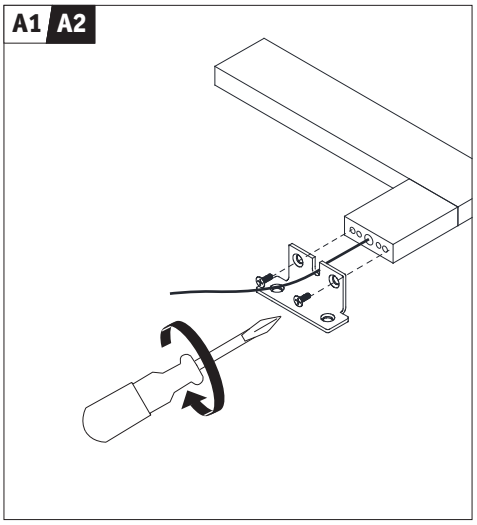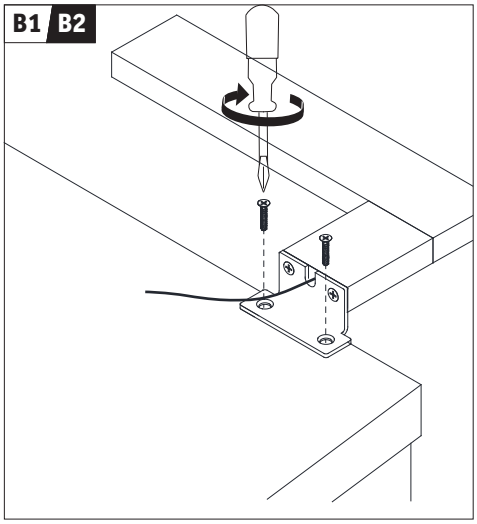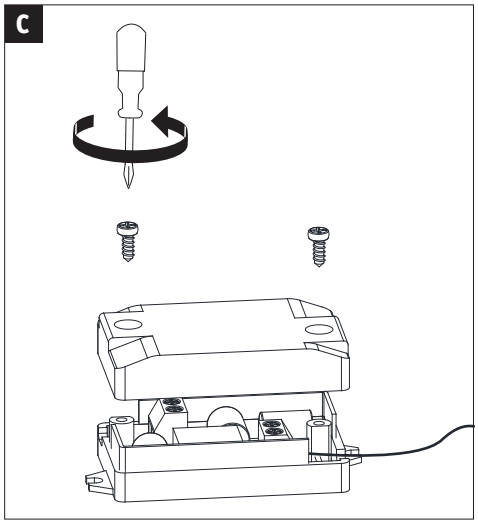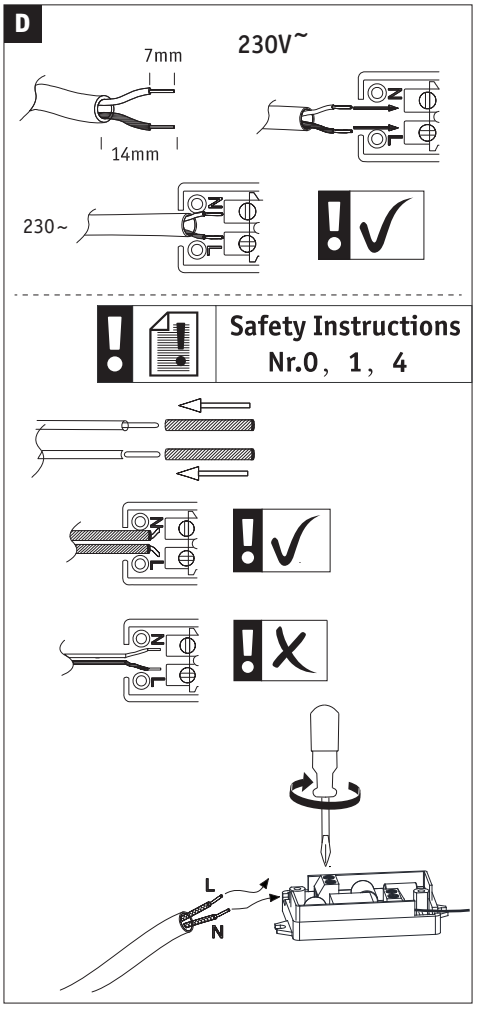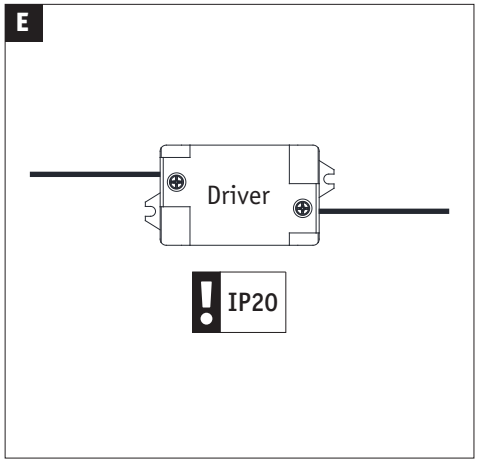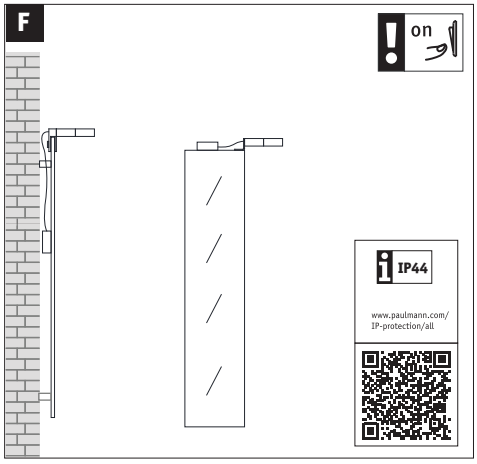
Art.-Nr.: **990.89** (+ MA 173) PAU 04/16